HUB | armchair

Francesco Rota | 2026



HUB

Francesco Rota | 2026

Designed for waiting areas, shared environments and informal meeting spaces, the new modular seating collection by Francesco Rota for Lapalma is conceived to connect people, activities and space through a clear, intuitive system that can be easily reconfigured. Hence the name HUB, evoking the idea of a point of convergence and exchange, able to accommodate ever-changing uses and configurations.
Linear and curved modules, connected through an integrated linking system, can create compact seating arrangements for smaller waiting areas, extended configurations for communal spaces, or even flowing compositions that follow circulation paths and shape soft islands within the space. The collection also includes backless versions, allowing the seating to extend into an open bench accessible from both sides. Configurations can evolve over time, adapting to changing environments, activities and ways of inhabiting the workplace.
Integrated power connectivity further reinforces HUB's suitability for the contemporary workplace. Discreetly positioned beneath the seat, power outlets provide functional support for moments of pause, interaction and informal work without compromising the clean lines of the design.



HUB

Francesco Rota | 2026

| armchair Upholstered armchair seat height 44 cm

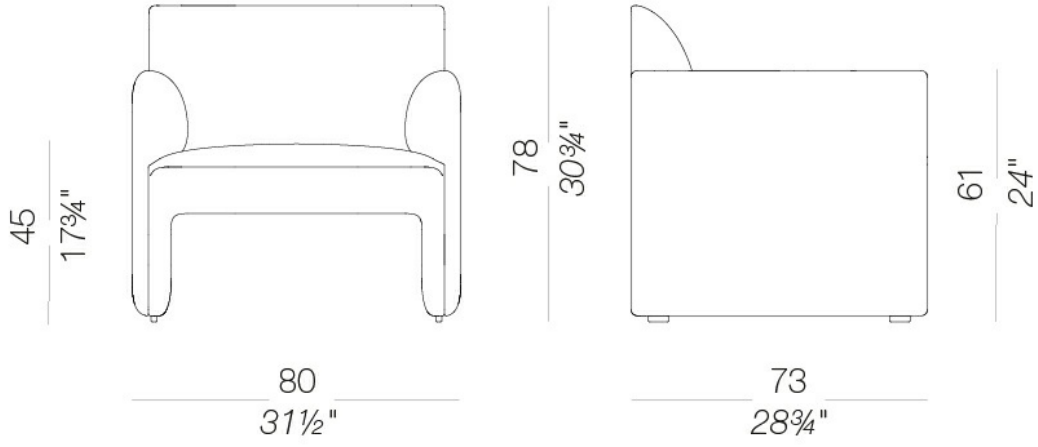

HUB | armchair

Francesco Rota | 2026

upholstery



fabric
Main Line Flax - Grade. B
57 Colors

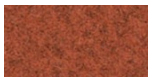

fabric
Blazer - Grade. C
77 Colors

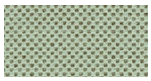

fabric
Umber - Grade. B
36 Colors



fabric
Nobel - Grade. C
30 Colors



fabric
Fiocco - Grade. B
34 Colors



fabric
Panama - Grade. A
48 Colors



fabric
Hallingdal 65 - Grade C
58 Colors



fabric
Steelcut Trio 3 - Grade D
52 Colors

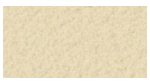

fabric
Divina - Cat. D
60 Colors



fabric
Maya - Grade A
43 Colors



fabric
Fiord 2 - Grade C
39 Colors



fabric
Tonica 2 - Grade C
39 Colors



fabric
Capture - Grade B
60 Colors



fabric
Steelcut 3 - Grade D
40 Colors



fabric
Grain - Grade. B
50 Colors

HUB | armchair

Francesco Rota | 2026

consult the porfolio for the range of colors, fabrics, eco-leather, soft-leather.

use and maintenance instructions
Clean all parts in wood, leather, fabric and metal with a damp cloth or a diluted neutral cleaner. Do not use cleaners with alcohol, bleach, solvent or abrasive products. Any liquid spilt on the product must be wiped up immediately.When lifting or moving the product, hold it on the structure and not under the seat. The product should not be subjected to unbalanced weights, as it is designed for a proper rest on the foothold (on four legs or on the base). Our company relieves from any responsibility in case of damage caused to fragile floors. Avoid any improper use of the product: do not step on the product, on the footrest or on the armrests. Avoid any movements that could compromise the proper functionality of the product or the safety of the users.Wood and leather, being natural materials, could be easily damaged. Small impurities or imperfections are within quality standard range.Do not expose the product to weather conditions or atmospheric agents, nor to heat sources over 40°C. Also products for outdoor use could be afflicted by atmospheric agents. The product could undergo possible exterior changes due to particular exposure to heat, humidity and saltiness. An appropriate and frequent maintenance and cleaning of the product enhances its durability. The product could change colour and shade, if exposed to direct sunlight. Maintenance has to be carried out by experienced staff. Dispose of the package only after assembling the product, in order to avoid the loss of ironmongery and components. Once the product has been dismantled, the product itself or its components must be given to the public garbage disposal system, according to the legislation in force.