Lana

rev. 22-03-2022

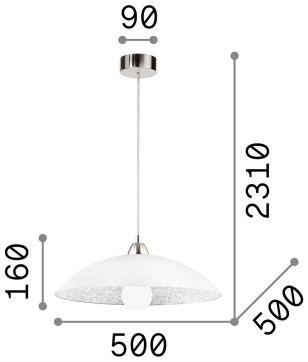

General info

DECORATIVO - Hanging

Transparent glass diffuser with silkscreen decorations inside and sandblasted outside. Chrome metal glass holders.

Ean	8021696068169
Item	LANA SP1
Installation	Hanging
Guarantee	5 years
Gross weight	4 kg
Volume	0.053312 m^3

Technical info

Net weight	2.72 kg
Insulation class	II
Protection index	IP20
Compliance	-
Operating temperature	-
Dimmer	No dimmerable
Power output	220-240 V AC
Power supply	Non necessario

Source info

Integrated source	Lampadina (non inclusa)
Repleaceable source	Sì
Power	E27 max 1 x 60W
Emission	-
Max consuption	-
Recommended bulb	E27 08W GLOBO D095 BIANCO 3000K

IDEAL LUX s.r.l.
Via Taglio Destro, 32, 30035 Mirano (Venezia)
Tel +39 041 5790500 | **Fax** +39 041 8872349 | **E-mail** info@ideal-lux.com
www.ideal-lux.com