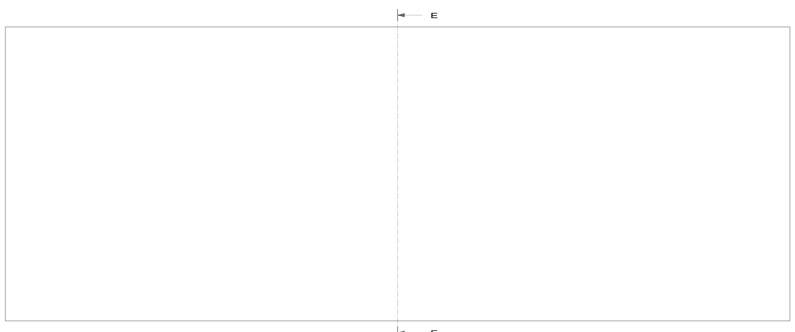

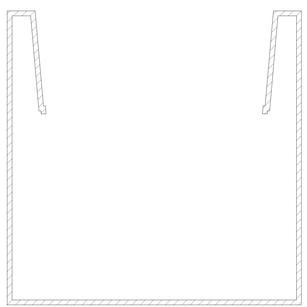
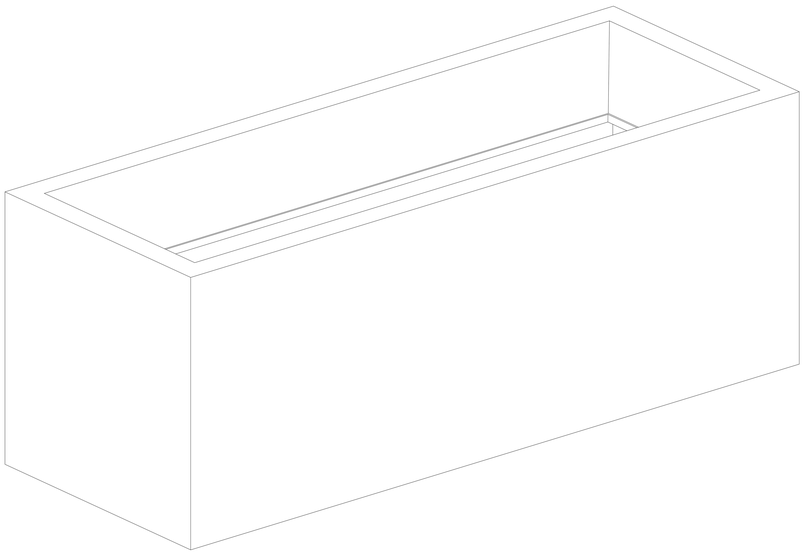
SECTION E-E